THIS DRAWING IS UNPUBLISHED
VERTRAULICHE UNVEROEFFENTLICHE ZEICHNUNG

RELEASE FOR PUBLIKATION ,2000
FREI FUER VEROEFFENTLICHUNG

© COPYRIGHT 2000 BY AMP INCORPORATED ALL RIGHTS RESERVED
ALLE RECHTE VORBEHALTEN

MATED WITH:
PASSEND ZU:
-

LOC	DIST
AI	-

PROJEKT NR. 8901815

REVISIONS
AENDERUNGEN

P	LTR	DESCRIPTION BESCHREIBUNG	DATE	DWN	APVD
A9		NEW 3-D DRAWN ECR-06-001232	02.01.2006	SR	BR

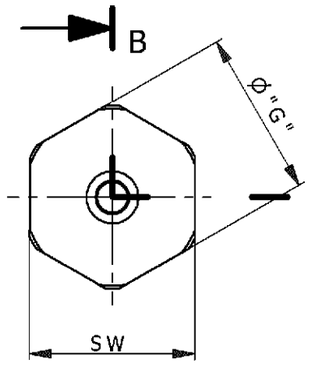

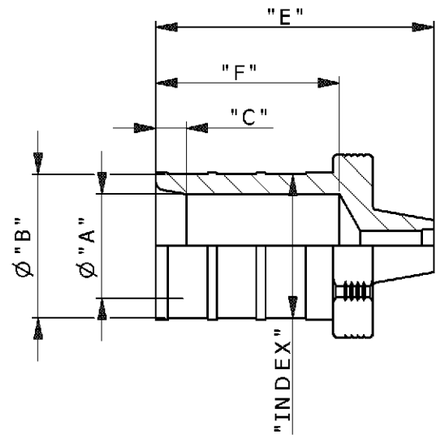

7

6

1-2	1-1	1-0	0-9	0-8	0-7	0-6	0-5	0-4	0-3	0-2	0-1	DESCRIPTION	DIN 48083	A	B	C	E	F	G	SW	MATERIAL	SURFACE	WEIGHT (Kg)	NOTES	ITEM
-	-	-	-	-	-	1	1	1	1	1	1	ADAPTOR									PA	BLACK	0,002		3
1	1	1	1	1	1	-	-	-	-	-	-	SHRINK. TUBE	-	-	-	-					PO	BLACK	0,003		2
-	-	-	-	-	-	1	1	1	1	1	1	SHRINK. TUBE	-	-	-	-					PO	BLACK	0,001		2
1	-	-	-	-	-	-	-	-	-	-	-	CRIMP BARREL	-	18,5	25,5	5,0	45,5	30.0	30,0	27	COPPER	SILVER PLATED	0,009	WIRE SIZE 185 MM²	1
-	1	-	-	-	-	-	-	-	-	-	-	CRIMP BARREL	14	17,0	23,5	5,0	45,5	30.0	30,0	27	COPPER	SILVER PLATED	0,093	WIRE SIZE 150 MM²	1
-	-	1	-	-	-	-	-	-	-	-	-	CRIMP BARREL	16	16,6	23,5	5,0	45,5	30.0	30,0	27	COPPER	SILVER PLATED	0,079	WIRE SIZE 140 MM²	1
-	-	-	1	-	-	-	-	-	-	-	-	CRIMP BARREL	14	15,5	21,0	5,0	45,5	30.0	30,0	27	COPPER	SILVER PLATED	0,072	WIRE SIZE 120 MM²	1
-	-	-	-	1	-	-	-	-	-	-	-	CRIMP BARREL	14	14,0	19,0	5,0	45,5	30.0	30,0	27	COPPER	SILVER PLATED	0,075	WIRE SIZE 105 MM²	1
-	-	-	-	-	1	-	-	-	-	-	-	CRIMP BARREL	12	13,5	19,0	5,0	45,5	30.0	30,0	27	COPPER	SILVER PLATED	0,075	WIRE SIZE 95 MM²	1
-	-	-	-	-	-	1	-	-	-	-	-	CRIMP BARREL	12	11,8	16,5	3,0	37,0	21,5	21,5	19	COPPER	SILVER PLATED	0,044	WIRE SIZE 70 MM²	1
-	-	-	-	-	-	-	1	-	-	-	-	CRIMP BARREL	10	10,0	14,5	3,0	37,0	21,5	21,5	19	COPPER	SILVER PLATED	0,041	WIRE SIZE 50 MM²	1
-	-	-	-	-	-	-	-	1	-	-	-	CRIMP BARREL	8	9,8	14,5	3,0	37,0	21,5	21,5	19	COPPER	SILVER PLATED	0,041	WIRE SIZE 48 MM²	1
-	-	-	-	-	-	-	-	-	1	-	-	CRIMP BARREL	8	8,2	12,5	3,0	37,0	21,5	21,5	19	COPPER	SILVER PLATED	0,038	WIRE SIZE 35 MM²	1
-	-	-	-	-	-	-	-	-	-	1	-	CRIMP BARREL	6	8,5	12,5	3,0	37,0	21,5	21,5	19	COPPER	SILVER PLATED	0,036	WIRE SIZE 30 MM²	1
-	-	-	-	-	-	-	-	-	-	-	1	CRIMP BARREL	5	7,0	10,0	3,0	37,0	21,5	21,5	19	COPPER	SILVER PLATED	0,034	WIRE SIZE 25 MM²	1
PART NO. / QUANTITY													ACC.	DIMENSIONS											

ORDERING TEXT: CH.25.MM²-13/16MM — 1x25mm² H07V-K
ORDERING TEXT: CH.30.MM²-13/16MM — 3x10mm² RADOX 155, ZYRAD 555, BETATHERM 155
ORDERING TEXT: CH.35.MM²13/16MM — 1x35mm² LAPP H07V-K UL Style 1015. CSA TEW
ORDERING TEXT: CH.48.MM²-13/16MM — 3x16mm² RADOX 155,ZYRAD 555, BETATHERM 155
ORDERING TEXT: CH.50.MM²-13/16MM — 1x50mm² LAPP H07V-K UL Style 1015. CSA TEW
ORDERING TEXT: CH.70.MM²-13/16MM — 1x70mm² / 2x35mm² LAPP H07V-K UL Style 1015. CSA TEW
ORDERING TEXT: CH.95.MM²-13/16MM — 1x95mm² H07V-K
ORDERING TEXT: CH.105.MM²-13/16MM — 3x35mm² LAPP H07V-K UL Style 1015. CSA TEW
ORDERING TEXT: CH.120.MM²-13/16MM — 1x120mm² H07V-K
ORDERING TEXT: CH.140.MM²-13/16MM — 4x35mm² LAPP H07V-K UL Style 1015. CSA TEW
ORDERING TEXT: CH.150.MM²-13/16MM — 1x150mm² H07V-K
ORDERING TEXT: CH.185.MM²-13/16MM — 1x185mm² H07V-K

NOTES

1 SUITABLE CONTACTS: SERIES HF06
CUSTOMER DRAWING: 11100948, 1110949

2 SUITABLE CONTACTS: SERIES HF08
CUSTOMER DRAWING: 1103037, 1103038

3 SUITABLE CRIMPING TOOL: HYDR. TOOL 30kN
CUSTOMER DRAWING: 1105653

4 SUITABLE CRIMPING TOOL: HYDR. TOOLS 60kN
CUSTOMER DRAWING: 1110956

5 DIE SIZE "INDEX" ACC. TO DIN 48083, SEE CUSTOMER DRAWINGS OF CRIMPING TOOLS

6 SHRINK. TUBE ACC. TO MIL I-23053 B/5, RATE 3:1

7 STANDARDS:
DIN EN 61984; DIN EN 60664-1

8 PACKAGING:
10 SETS IN A CARTON

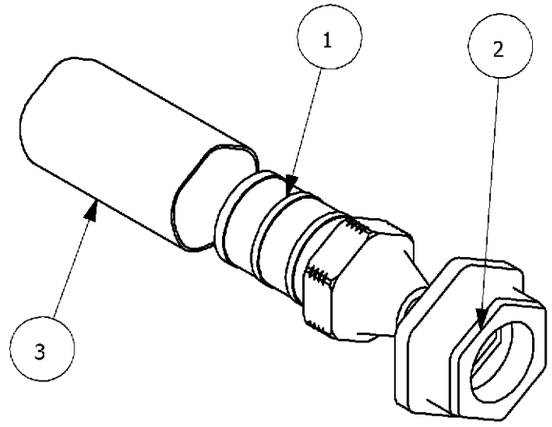

THIS DRAWING IS A CONTROLLED DOCUMENT FOR AMP INCORPORATED. IT IS SUBJECT TO CHANGE AND THE CONTROLLING ENGINEERING ORGANIZATION SHOULD BE CONTACTED FOR THE LATEST REVISION.
DIESES ZEICHNUNGSDOKUMENT WIRD DURCH AMP INCORPORATED KONTROLLIERT. AENDERUNGEN, DIE DEM TECHNISCHEN FORTSCHRITT DIENEN, SIND VORBEHALTEN. DEN JEWEILS LETZTGUELTIGEN AENDERUNGSSTAND ERFAHREN SIE AUF ANFRAGE.

DIMENSIONS: DIMENSIONEN: mm

TOLERANCES UNLESS OTHERWISE SPECIFIED: ALLGEMEINTOLERANZEN
n. ISO 8015 -
n. ISO 2768 - mH-E
n. DIN 16901- 140
0 PLC #
1 PLC #
2 PLC #
3 PLC #
ANGLES / WINKEL #

MATERIAL

FINISH / OBERFLAECHE / FARBE

DWN	SCHNEIDER	02.01.2006
CHK	BRAUN	02.01.2006
APVD	SCHNURPFEIL	02.01.2006
PRODUCT SPEC. PRODUKTSPEZ.	108-74024	
APPLICATION SPEC. VERARBEITUNGSSPEZ.	114-74024	
WEIGHT GEWICHT	0,001 KG	

tyco Electronics

Tyco / Electronics AMP GmbH
D - 53819 Neunkirchen

NAME
CRIMP BARREL
ASSY HF13, HF16

SIZE	CAGE CODE	DRAWING NO ZEICHNUNGS-NR.	RESTRICTED TO NUR FUER
A3	00779	C- 1110953	

CUSTOMER DRAWING / KUNDENZEICHNUNG

SCALE MASSSTAB	SHEET BLATT	OF VON	REV.
1:1	1	1	A9